THIS COPY IS PROVIDED ON A RESTRICTED BASIS AND IS NOT TO BE USED IN ANY WAY DETRIMENTAL TO THE INTERESTS OF PANDUIT CORP.

PANDUIT PART NUMBER	WEIGHT
FRTSC12W4	1.01 LB/EACH (458g/EACH)

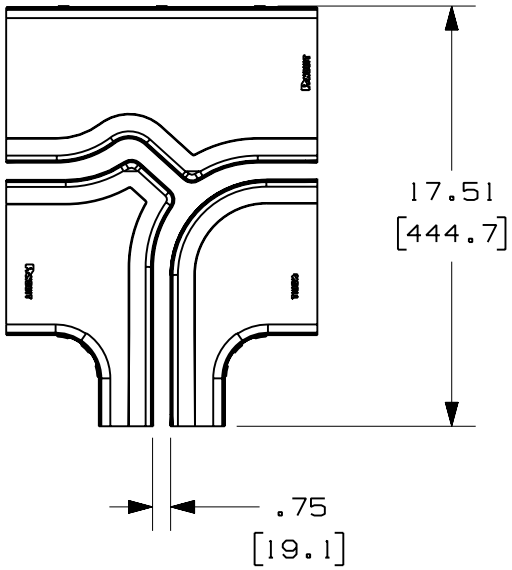

NOTES:

1. SEE CURRENT CATALOG FOR ADDITIONAL PART SUFFIXES TO INDICATE COLOR AND/OR PACKAGE QUANTITY.
2. THE FIBERRUNNER 12x4 HORIZONTAL TEE WITH 4" EXIT SPLIT COVER REQUIRES NO TOOLS FOR INSTALLATION AND/OR REMOVAL. THE SPLIT COVER CREATES A 3/4" (19.1) RADIUSED OPENING TO ALLOW FOR NEW CABLES TO BE ADDED WITHOUT THE NEED FOR REMOVING THE COVERS.
3. DIMENSIONS IN PARENTHESES ARE IN METRIC.

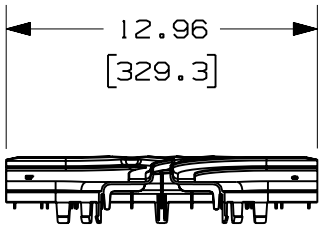

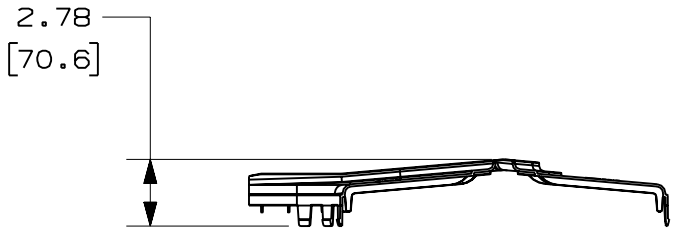

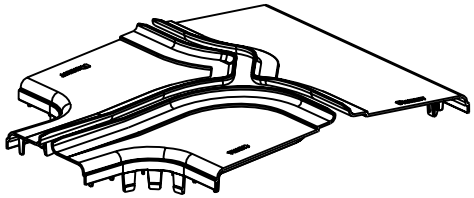

ENG. REF.: D39774BH_DC/00 FRTSC12W4

REV	DATE	BY	CHK	DESCRIPTION	ECN	- R	CUST	SUP	GMBH
R	10-22-08	MSO	SL	RELEASED TO PRODUCTION	39774-08	RN	RN		

CAD FILENAME/LAYERS: FRTSC12W4.pdf

PANDUIT CORP TINLEY PARK, ILLINOIS

FIBERRUNNER 12x4 HORIZONTAL TEE WITH 4" EXIT SPLIT COVER (FRTSC12W4)

CUSTOMER DRAWING

UNLESS OTHERWISE SPECIFIED, DIMENSIONAL TOLERANCES ARE:
(.X) ± (.XXX) ±
(.XX) ±.03 (.8) ANGLES ±

UNLESS OTHERWISE SPECIFIED, ALL DIMENSIONS ARE GIVEN IN INCHES, THIRD ANGLE PROJECTION.

DRAWN BY: MSO
DATE: 10-22-08
CHK'D: SL
MAT'L: ABS
SCALE: NONE
DRAWING NO.: 39774-08
DWG SIZE: A